Unit Model #: 795001 & 795003

Description: 50 cu. ft. Estate Trailer Vac	
Drive Type: Briggs & Stratton 10HP Gas Engine / Yanmar 7HP Diesel Engine	
Mower Type: Universal	
Instruction Sheet: Q0093	**Vac Type:** Engine Driven Pasture Vac
Revision #: 1 - 1/15/2020 (XY)	**Fits Year(s):** N/A

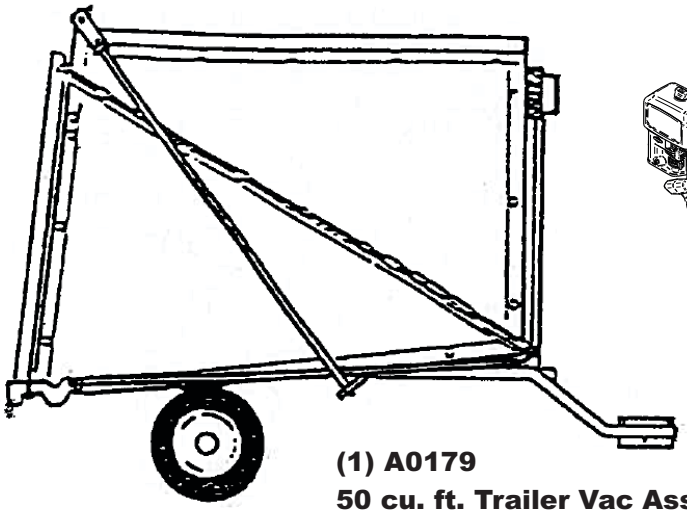

(1) A0179
50 cu. ft. Trailer Vac Assy.

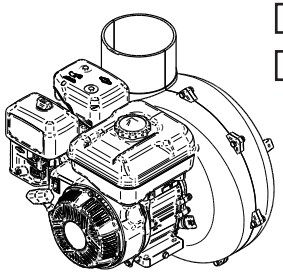

- ☐ **A615 - B&S 10HP Vanguard**
- ☐ **A620 - Yanmar 7HP Diesel**

(1) A08185
Hardware Bag

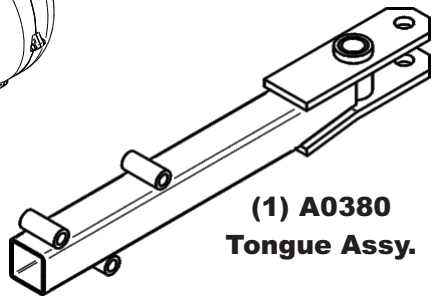

(1) A0380
Tongue Assy.

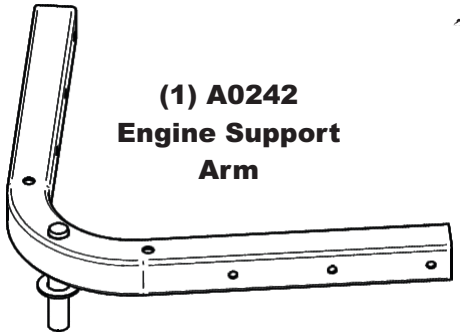

(1) A0242
Engine Support
Arm

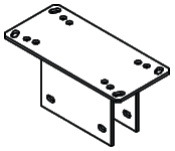

(1) A0243
Engine Mount

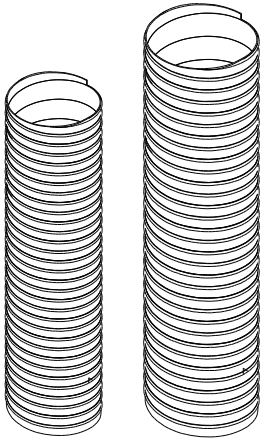

- ☐ **F0070 - Lower Hose 7” x 75”**
- ☐ **F0080 - Lower Hose 8” x 75”**

- ☐ **J0070 - 7” Hose Clamps**
- ☐ **J0080 - 8” Hose Clamps**

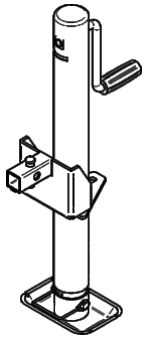

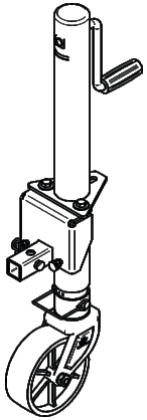

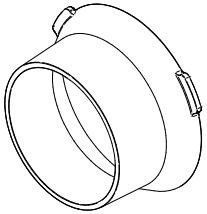

- ☐ **E6007 7” Blower Cone**
- ☐ **E6008 8” Blower Cone**

(1) F0070
Upper Hose
7” x 60”

(2) J0070
7” Hose
Clamps

☐ **(1) A2200**
Jack Stand
(Standard)

☐ **(1) A2201**
Jack Stand
w/ Wheel
(Optional)

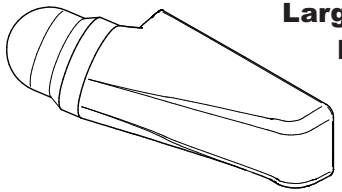

(1) A0137
Large Universal
Boot Kit