Unit Model #: 693601 & 793603

Description: 36 cu. ft. Estate Trailer Vac	
Drive Type: Briggs & Stratton 900 Series Gas Engine / Briggs & Stratton 6.5 HP Vanguard	
Mower Type: Universal	
Instruction Sheet: Q0094	**Vac Type:** Engine Driven Pasture Vac
Revision #: 1 - 1/15/2020 (XY)	**Fits Year(s):** N/A

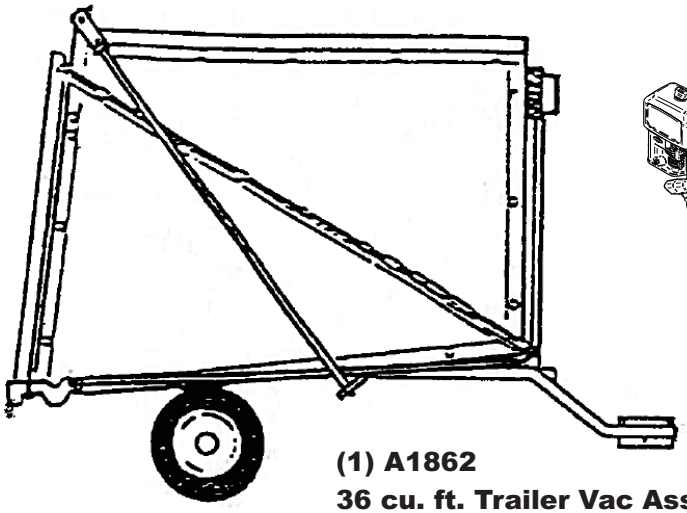

(1) A1862
36 cu. ft. Trailer Vac Assy.

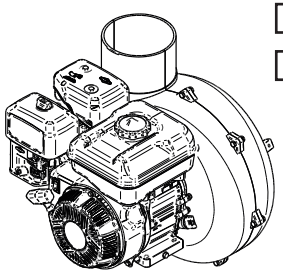

- ☐ **A602 - B&S 900 Series**
- ☐ **A639 - B&S 6.5 HP Vanguard**

(1) A08167
Hardware Bag

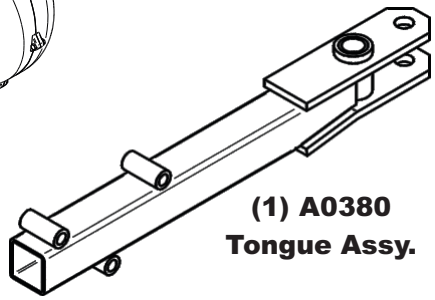

(1) A0380
Tongue Assy.

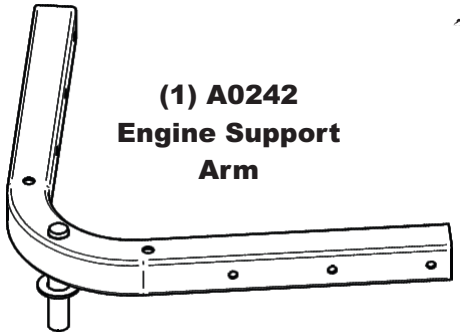

(1) A0242
Engine Support
Arm

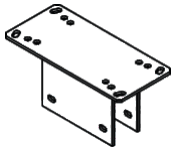

(1) A0243
Engine Mount

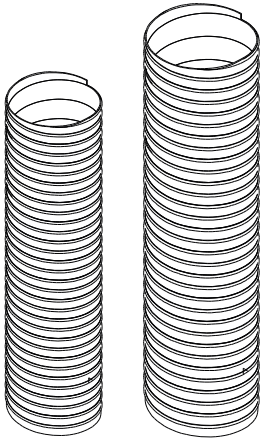

- ☐ **F0070 - Lower Hose 7” x 66”**
- ☐ **F0080 - Lower Hose 8” x 66”**

- ☐ **J0070 - 7” Hose Clamps**
- ☐ **J0080 - 8” Hose Clamps**

(2) J0060
6” Hose
Clamps

(1) F0060
Upper Hose
6” x 45”

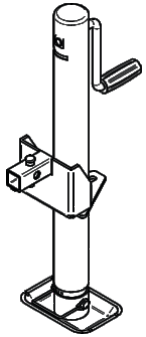

☐ **(1) A2200**
Jack Stand
(Standard)

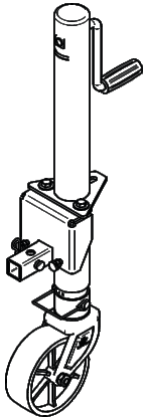

☐ **(1) A2201**
Jack Stand
w/ Wheel
(Optional)

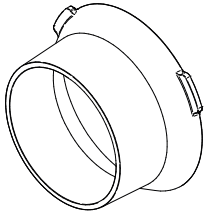

- ☐ **E6004 7” Blower Cone**
- ☐ **E6009 8” Blower Cone**

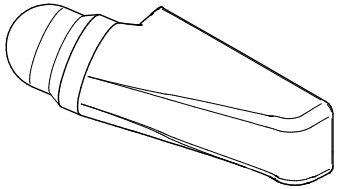

- ☐ **A0121 Small Universal Boot Kit**
- ☐ **A0137 Large Universal Boot Kit**