ENGINE DRIVEN GRASS COLLECTION SYSTEM

DESIGNED FOR:

Classic Series

MODEL #: 38621241 & 38621244

Classic 2750KW, 2760KW, 3160HP, 3160EFI
3572HP, 3572EFI & 3672BR

OPERATOR'S MANUAL

ASSEMBLY • OPERATION • MAINTENANCE

MANUAL PART#: Q0505

GRASS COLLECTION SYSTEM

TABLE OF CONTENTS

SECTION	PAGE
Safety	2
Safety Alert Symbols	3
Warranty	4
I INTRODUCTION AND DESCRIPTION	5
1-1 Introduction	5
1-2 Description	5
II INSTALLATION FOR USE	6
2-1 Outer Engine Mount Tube Installation	6
2-2 Engine Mount Arm Assembly Installation	7
2-3 Engine/Blower/Blade Assembly Installation	7
2-4 Blower Cone Installation	8
2-5 Main Frame Assembly Installation	8-9
2-6 Box Handle Assembly Installation	9-10
2-7 Aluminum Grass Container Installation	11
2-8 Dump Mechanism Adjustment	12
Aluminum Grass Container Exploded View	13
2-9 Boot To Mower Deck Installation	14
2-10 Length of Hose Adjustment	15
2-11 Upper Hose Installation	15
2-12 Lower Hose To Blower Cone Installation	15
2-13 Lower Hose To Boot Installation	15
2-14 Impeller Blade Removal/Replacement	16
2-15 Weight Kit Installation	17
2-16 Throttle Kit Installation	18
Exploded Drawing Views and Parts Lists	19-20
III OPERATING INSTRUCTIONS	21
3-1 General Safety	21
3-2 Operation & Tips On Mowing	21
3-3 Disengagement Of The Blower	21
3-4 Unloading The Collection System	21
IV MAINTENANCE	21
4-1 Maintenance Checklist	21-22
V PARTS AND SERVICE	22
5-1 Parts And Service Information	22
Safety Decals	23
Torque Specifications	24

Safety

1. Read the operator's manual carefully and familiarize yourself with the proper use of your attachment. Do not allow anyone who is not acquainted with the Safety Instructions to use your attachment.
2. Know the controls and how to stop quickly. READ THE OPERATOR'S MANUAL!
3. Do not allow children to operate the vehicle. Do not allow adults to operate it without proper instruction.
4. Be especially watchful of children and pets darting into the area while operating.
5. Keep your eyes and mind on your unit while mowing or operating your attachment. Don't let others distract you.
6. Do not attempt to operate your unit or mower when not in the driver's seat.
7. Always stop unit when emptying the container.
8. Stop unit, shut off deck attachment, set parking brake, shut off mower engine and remove spark plug wire before removing clogs, removing or replacing hose, boot, blower cone, or performing any maintenance.
9. Mow across the face of slopes (not steeper than 10 degrees); never up and down the face.
10. It is recommended that the container be kept only half full when negotiating any slopes. Start mowing on slopes when the container is empty.
11. Inspect your lawn and remove any foreign objects before mowing. Never deliberately run the mower across any foreign object.
12. Wear ear protection if the noise level is offensive.
13. Wear eye protection to prevent debris from damaging your eyes.

SAFETY

WARNING! NEVER operate the mower unless the discharge guard and either the deflector assembly or the vacuum collector adapter are fastened securely in place.

WARNING! Do not work around the mower deck boot or the blower area until you are certain that the mower blades and the blower impeller have stopped rotating.

WARNING! To avoid serious injury, perform maintenance on the vacuum collector; **ONLY AFTER STOPPING THE MOWER'S ENGINE AND WAITING FOR ALL MOVING PARTS TO COME TO A COMPLETE STOP.** Set the parking brake. Always remove the ignition key before beginning maintenance.

WARNING! For your own personal safety, **ALWAYS** mow **ACROSS** the face of slopes and **NEVER UP and DOWN** the face. **NEVER** attempt to mow excessively steep slopes, and use caution when turning on any slope.

Safety Alert Symbol

This Safety Alert Symbol means: **"ATTENTION! BECOME ALERT! YOUR SAFETY IS INVOLVED!"**
This symbol is used to call attention to safety precautions that should be followed by the operator to avoid accidents. When you see this symbol, carefully read the message that follows and heed its advice. Failure to comply with safety precautions could result in death or serious bodily injury.

Safety Signs

The signal words **DANGER, WARNING,** and **CAUTION** are used on the equipment safety signs. These words are intended to alert the viewer to the existence and the degree of hazard seriousness.

White letters on ***RED***

This signal word indicates a potentially hazardous situation which, if not avoided, will result in death or serious injury.

Black letters on ***ORANGE***

This signal word indicates a potentially hazardous situation which, if not avoided, could result in death or serious injury.

It may also be used to alert against unsafe practices.

Black letters on ***YELLOW***

This signal word indicates a potentially hazardous situation exist which, if not avoided, could result in minor injury or property damage.

It may also be used to alert against unsafe practices.

PECO LIMITED WARRANTY FOR NEW PRODUCTS

A. WHAT IS UNDER WARRANTY?

PECO extends the following warranties to the original purchaser of each new PECO consumer product subject to the following limitations.

1. PRODUCT WARRANTY: Any part of any consumer product, which is defective in material or workmanship as delivered to the purchaser will be repaired or replaced, as PECO elects, without charge for parts or labor, if the defect appears within 12 months from the date of delivery of the product to the original purchaser.

ALL DEFECTIVE PARTS MUST BE RETURNED TO PECO FOR INSPECTION TO DETERMINE VALIDITY OF WARRANTY CLAIMS. Freight and mailing will be borne by the customer.

2. PARTS REPLACED DURING WARRANTY: Any new PECO part which is furnished in performance of this warranty and is defective in material or workmanship as delivered to the purchaser will be repaired or replaced, as PECO elects, without charge if the defect appears within 90 days from the date of installation of such part or before the expiration of the original warranty period, whichever is later.

B. SECURING WARRANTY ADJUSTMENTS.

Call PECO for Return Authorization. Damaged or broken parts other than engines or batteries, must be returned to New PECO, Inc. 10 Walden Dr., Arden, NC 28704 before any warranty adjustment can be authorized. At the time of requesting warranty adjustment, the purchaser must present evidence of the date of delivery of the product. The purchaser shall pay any charge for the product to and from Arden, NC.

C. ITEMS NOT COVERED BY PECO WARRANTY.

Engines and batteries attached to PECO products are covered under a separate warranty by the respective manufacturer.

D. UNAPPROVED ALTERATION OR MODIFICATION.

All obligations of New PECO, Inc. under this warranty shall be terminated if products are altered or modified in ways not approved by New PECO, Inc.

E. ACCIDENTS AND NORMAL MAINTENANCE.

The warranty covers only defective material and workmanship. It does not cover depreciation or damage caused by normal wear, accident, improper use or abuse of products. The cost of normal maintenance and normal replacement of service items such as belts, cutting blades, hoses, etc., which are not defective shall be paid for by the purchaser.

F. NO REPRESENTATIONS ADDITIONAL WARRANTIES, DISCLAIMER.

Neither New PECO, Inc. nor any company affiliated with it makes any warranties, representations or promises as to the quality of performance of its products other than those set forth herein. Except as described above, New PECO, Inc. makes no other warranties **AND SPECIFICALLY DISCLAIMS ANY AND ALL IMPLIED WARRANTIES OF FITNESS AND MERCHANTABILITY.**

G. ANY MACHINE USED FOR RENTAL PURPOSES ARE GUARANTEED FOR 45 DAYS FROM DATE OF ORIGINAL SALE ONLY.

H. REMEDIED EXCLUSIVE.

The only remedies the purchaser has in connection with the breach or performance of any warranty on New PECO, Inc. consumer products are set forth above. In no event will PECO be liable for special incidental or consequential damages.

1. NO SERVICE CENTER WARRANTY.

The selling Service Center makes no warranty on his own on any item warranted by New PECO, Inc. unless he delivers to purchaser a separate written warranty certificate specifically warranting the item. The dealer has no authority to make any representation or promise on behalf of PECO or to modify the terms of this warranty in any way.

Rev 2 (8/15)

Section I - INTRODUCTION AND DESCRIPTION

1-1 Introduction

We are pleased to have you as a PECO customer. Your collection system has been designed to give you a low maintenance, simple, and effective way to collect the grass clippings from your mower. This manual is provided to give you the necessary instructions to properly mount and operate the collection system on your mower. Please read this manual thoroughly. Understand what each control is for and how to use it. Observe all safety decal precautions on the machine and noted throughout the manual.

NOTE*:* all references made to right, left, front, rear, top or bottom are as viewed from the normal operator's position on the mower.

1-2 Description

The grass collection system is designed for turf maintenance where there is a need to collect the grass clippings as the mower cuts the turf. It is also used for picking up leaves and in pre-season and post-season clean-up. The engine/blower/blade assembly is mounted on the right side of the unit. The blower draws grass clippings from the discharge area of the cutter deck back to the 12 cubic foot aluminum box at the rear portion of the mower frame. The operator can engage the blower by starting the external engine. Once the container is full of clippings, the operator can easily push and raise the lift handle, releasing the container's rear door and the container will pivot towards the ground.

2-1 Outer Engine Mount Tube Installation

Attach (2) Outer Engine Mount Brackets P#(B0569) to the rear frame of the mower, in the position and orientation shown in Figure 2-1a and 2-1b, using (2) 3/8”-16 x 2-1/4" x 1-3/4" U-Bolts P#(K1436) and (4) 3/8”-16 Ny-Flange Locknuts P#(K2038) PER BRACKET. Leave the hardware finger tight until the blower assembly has been installed and positioned correctly.

Figure 2-1a

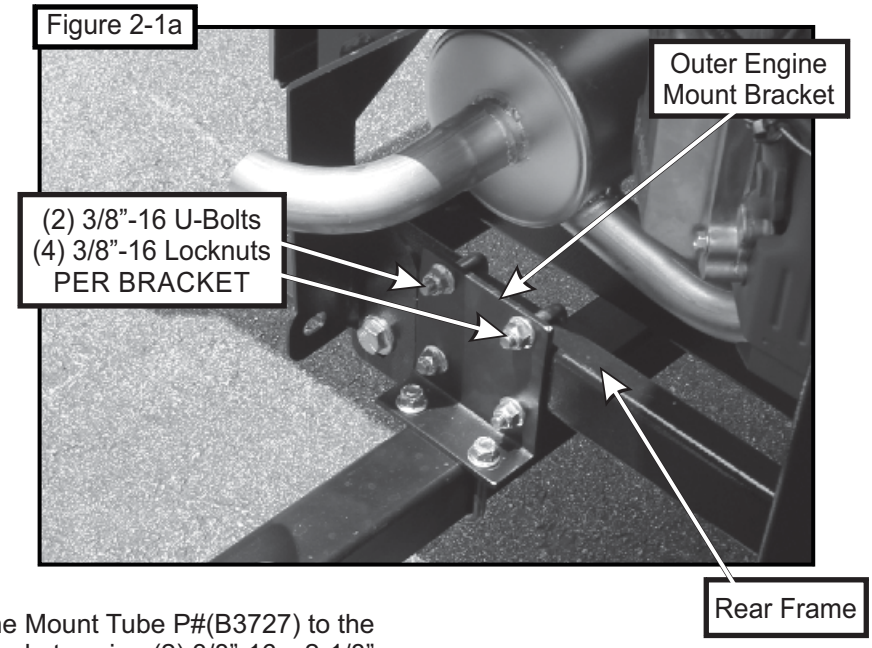

Secure the Outer Engine Mount Tube P#(B3727) to the Outer Engine Mount Brackets using (2) 3/8”-16 x 2-1/8” x 2-5/8" U-Bolts P#(K1119) and (4) 3/8”-16 Ny-Flange Locknuts P#(K2038). Leave the hardware finger tight until the Blower Assembly has been installed. Refer to Figure 2-1b for reference.

Figure 2-1b

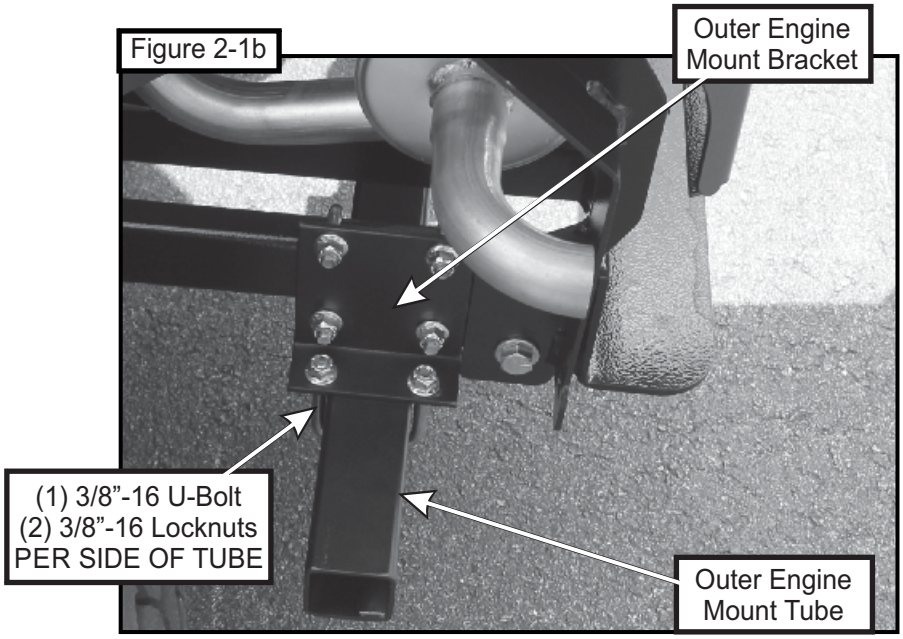

2-2 Engine Mount Arm Assembly Installation

Insert the Engine Mount Arm Assembly P#(A1916) into the Outer Engine Mount Tube and secure using (1) Detent Pin P#(J0248). Refer to Figure 2-2.

2-3 Engine/Blower/Blade/Assembly Installation

Position the Engine/Blower/Blade Assembly P#(A639) on top of the Engine Mount Arm Assembly as shown in Figure 2-2, and secure using (4) 5/16”-18 x 1-1/2” HHCS P#(K1157) and (4) 5/16”-18 Ny-Flange Locknuts P#(K2516).

Figure 2-2

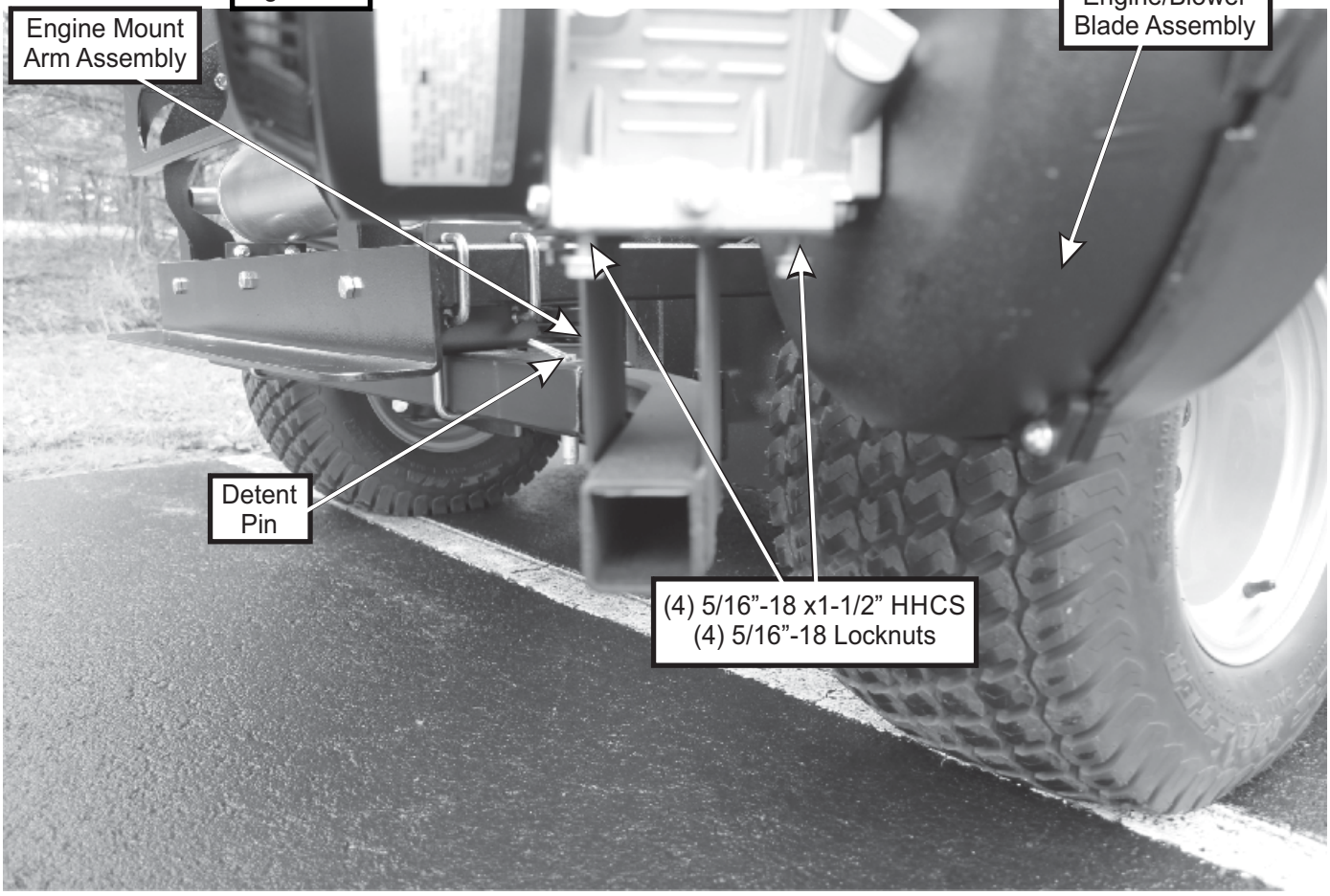

2-4 Blower Cone Installation

Thread (1) 5/16”-18 Jam Nut P#(K0120) onto the end of each (2) 5/16”-18 x 2-1/2” HHCS P#(K0125). Now partially thread the bolts into each of the two tabs located on the Blower Housing. Place Blower Cone P#(E6009) so the two tabs line up with the bolts then tighten completely. See Figure 2-4.

Figure 2-4

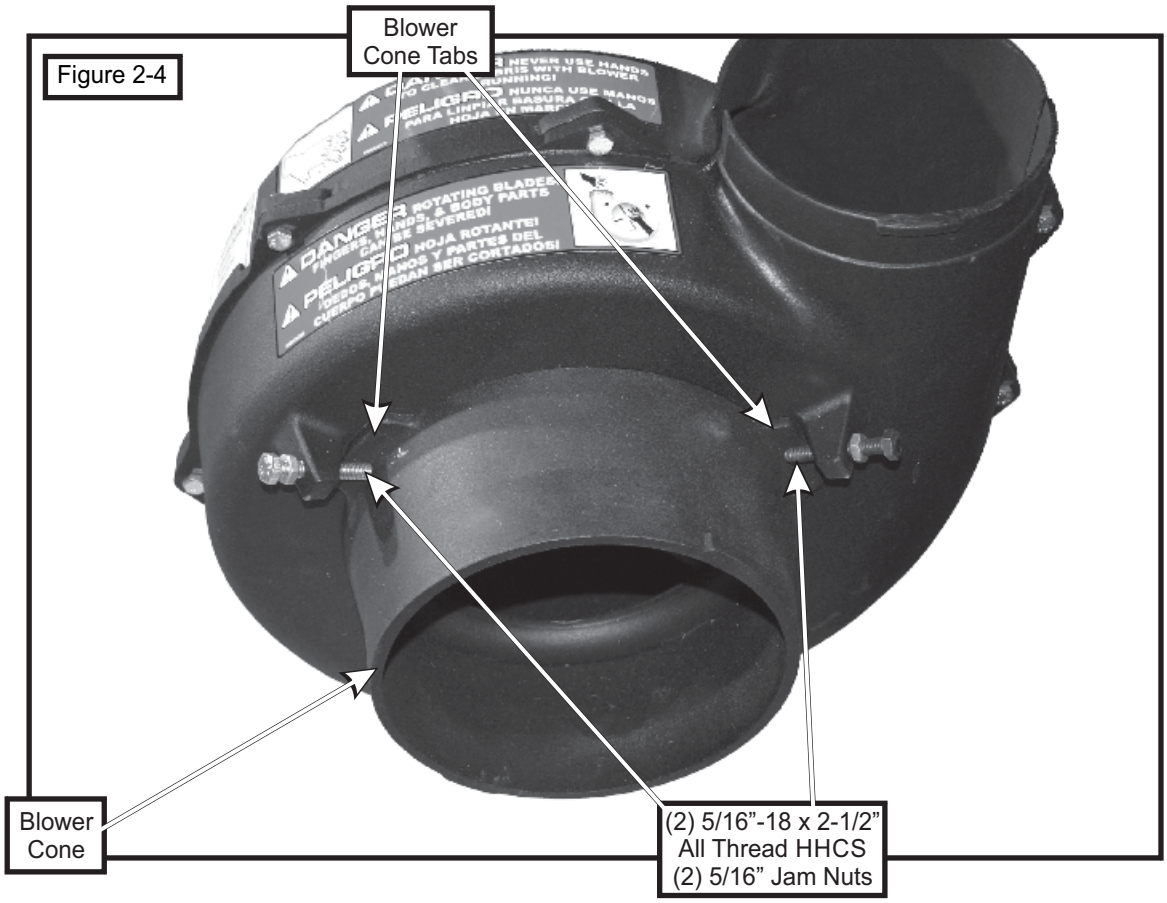

2-5 Main Frame Assembly Installation

Install the Lower Main Frame P#(B0567) by attaching to the ROPS (Roll Over Protection System) using (1) 3/8”-16 x 2-1/8” x 2-5/8” U-Bolt P#(K1119) and (2) 3/8”-16 Ny-Flange Locknuts P#(K2038) on each side. Secure the back section using the Frame Mount Spacer P#(B0777) and the Main Frame Clamp P#(B0302) with (2) 3/8”-16 x 1” HHCS P#(K1191) and (2) 3/8”-16 Ny-Flange Locknuts P#(K2038). Refer to Figure 2-5b

Attach the Main Frame Assembly P#(A1097) to the Lower Main Frame P#(B0567) using (4) 1/2”-13 x 1-1/4” HHCS P#(K1232) and (4) 1/2”-13 Ny-Flange Locknuts P#(K2012). Use the middle set of mounting holes on the Main Frame Assembly and the front set of mounting holes on the Lower Main Frame. Refer to Figure 2-5c on next page.

Figure 2-5b

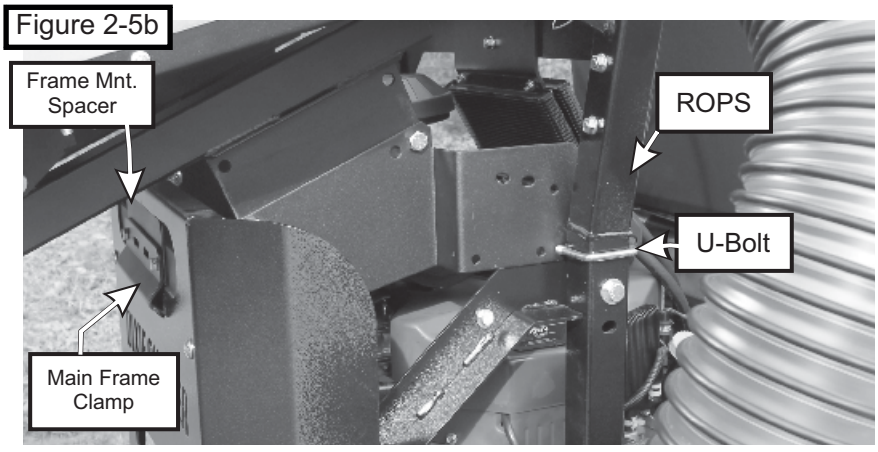

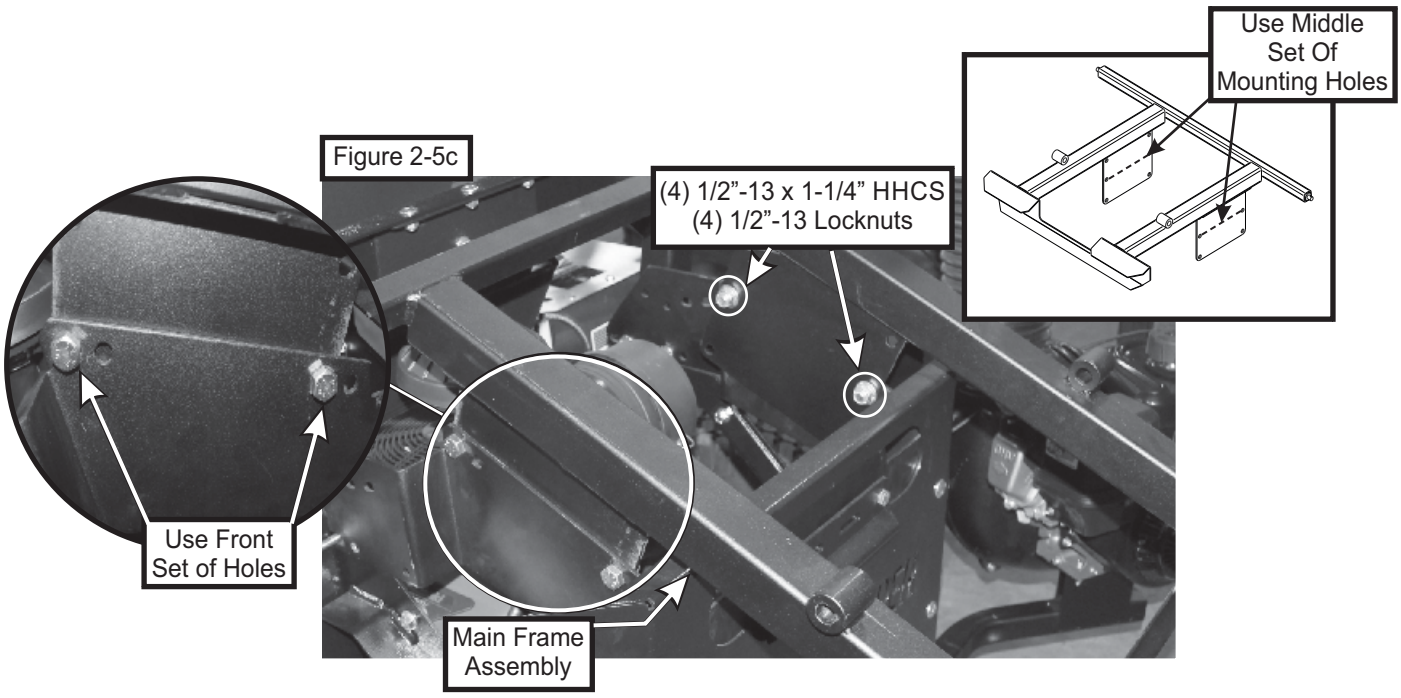

2-6 Box Handle Assembly Installation

NOTE: Before continuing the lift handle installation, have someone assist you in turning the grass container upside down. Insert (1) 3/8”-16 x 2” HHCS P#(K1208) into the Box Handle Assy. P#(A0273) on the 72” or P#(A0897) on the 50” & 60” and secure with (1) 3/8”-16 flange nut P#(K1215). Thread the flange nut onto the bolt upside down, as shown in Figure 2-6a.

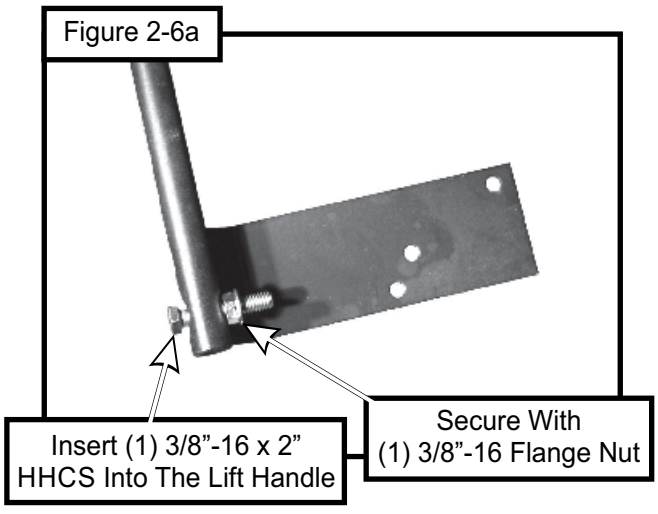

Slide the lift handle through the slot on the Handle Mount Bracket. Insert the Lift Handle into the box frame as shown in Figure 2-6b, and secure using (1) 3/8”-16 Flange Nut P#(K1215) on the inside of the container as shown in Figure 2-6c.

Figure 2-6b

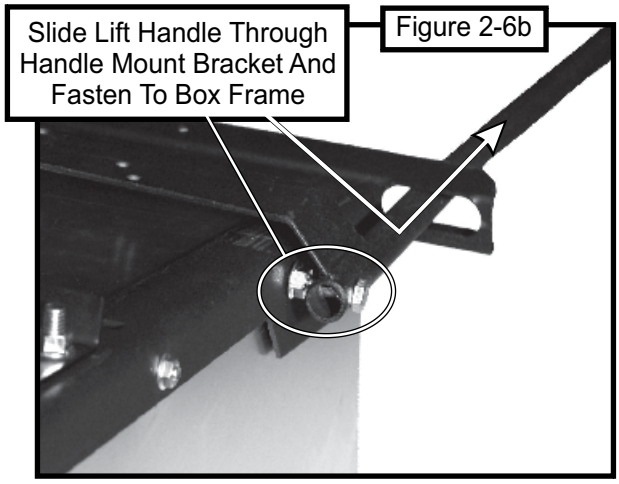

Figure 2-6c

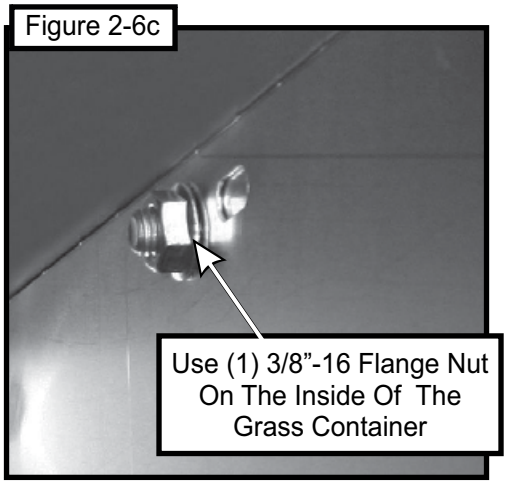

Fasten the ball joint P#(K1442) to the end of the Latch Rod P#(A0260). Tighten the Ball Joint to approximately half way down the threads on the Latch Rod. Attach the ball joint to the Latch Hook as shown in Figure 2-6d, using (1) 5/16”-24 Hex Nut P#(K1444) and (1) 5/16” Lock Washer P#(K0043).

Figure 2-6d

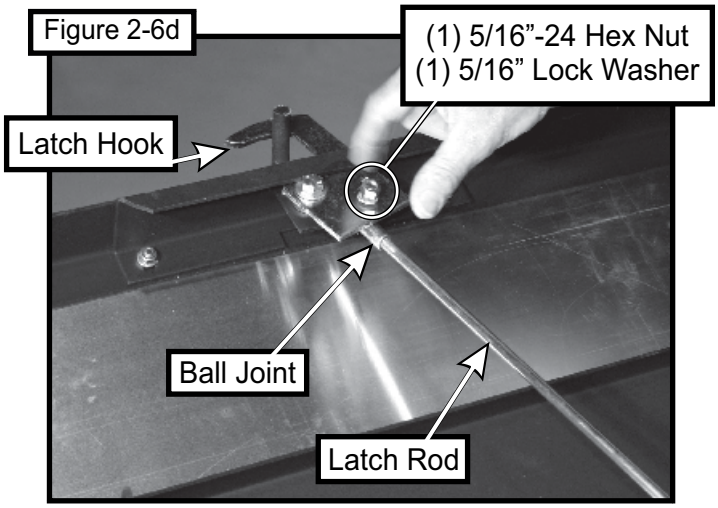

Attach the other end of the latch rod to the lift handle, as shown in Figure 2-6e. Attach on end of the spring P#(J0176) to the lift handle and the other end of the spring to the handle mount bracket as shown in Figure 2-6f. Adjust the ball joint up or down on the latch rod threads until the latch hook closes completely. After adjusting the latch hook, secure the latch rod to the lift handle using (1) cotter pin P#(K0094).

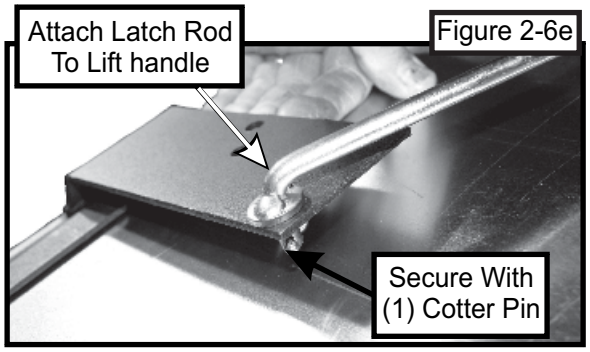

Figure 2-6e

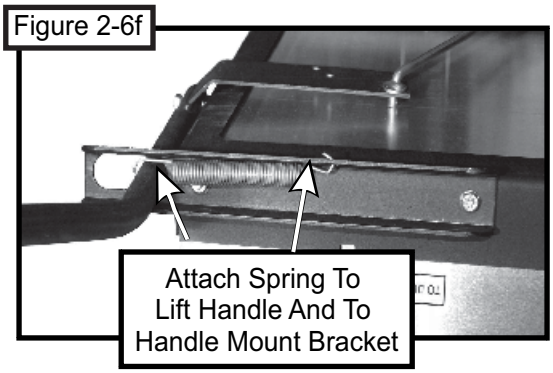

Figure 2-6f

2-7 Aluminum Grass Container Installation

NOTE: It is recommended that someone assist in mounting the container. Lower the container onto the frame while inserting the Pivot Pins P#(K0172) through the holes. Insert the pins from the outside to the inside. Secure with (1) 5/8" Washer P#(K0058) and (1) 5/32" x 2-5/8" Hair Pin Clip P#(K0088) per pivot pin (Figure 2-7a). Reattach the bottom ends of the door opening linkages to the main frame by using (1) Rue-Ring cotter pin P#(K1437) per side. To test the functionality of the dump mechanism, pull the lift handle away from the unit, and lift upward. The door of the container should open and the box should pivot clockwise towards the ground.

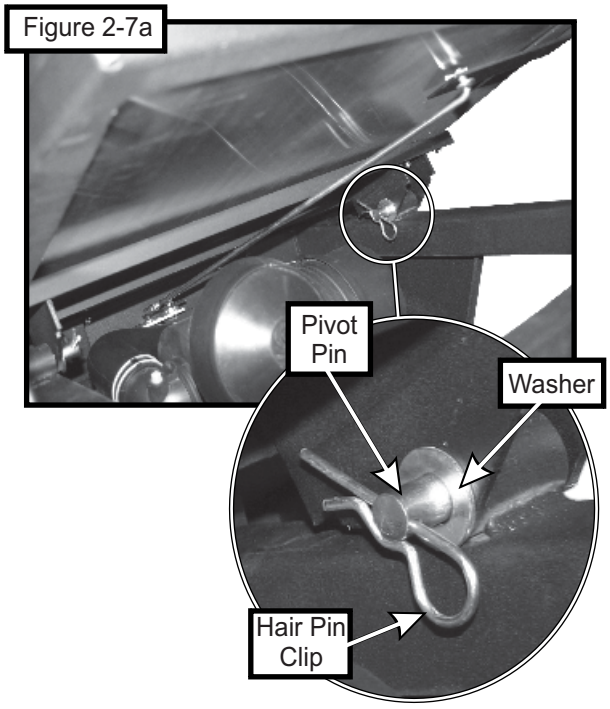

Figure 2-7a

To service your air filter, place your PECO Pro 12 Aluminum Grass Container in the dump position. Using a 12 mm wrench, remove the fastener securing the strap that holds the air filter housing in place. Lift the strap and unhook from the other side. At this point the filter housing should be able to pivot and rotate enough to gain access to the clasps holding the housing together. Open clasps, remove cover and replace filter if needed. See Figure 2-7b

Figure 2-7b

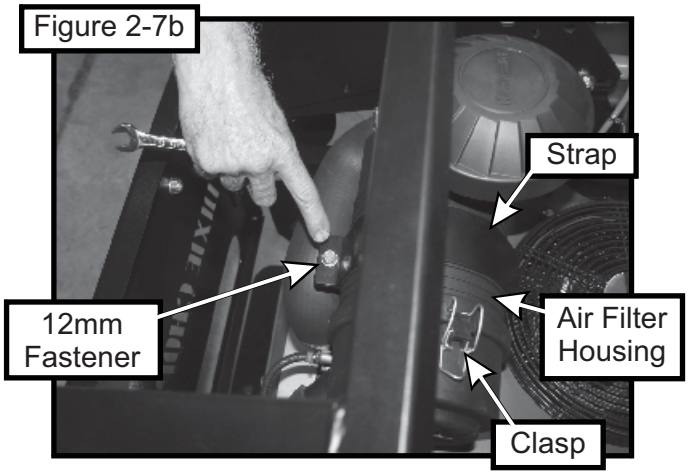

2-8 Dump Mechanism Adjustment

The linkage may be adjusted in two places, at the Adjusting Screw P#(K1435) and the latch assembly items. To change the door closure tightness, screw the adjusting screw (Figure 2-8) in or out. To adjust the latch, change the length of the latch rod by screwing the latch adjusting ball joint in or out. The latch hook pivot should be in the middle of the slot in the latch hook pivot plate. Slide the pivot back or forth and then re-tighten.

Figure 2-8

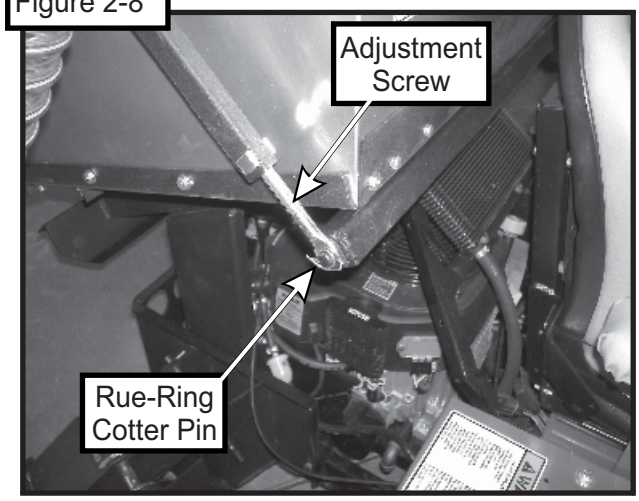

ALUMINUM GRASS CONTAINER ASSEMBLY EXPLODED VIEW

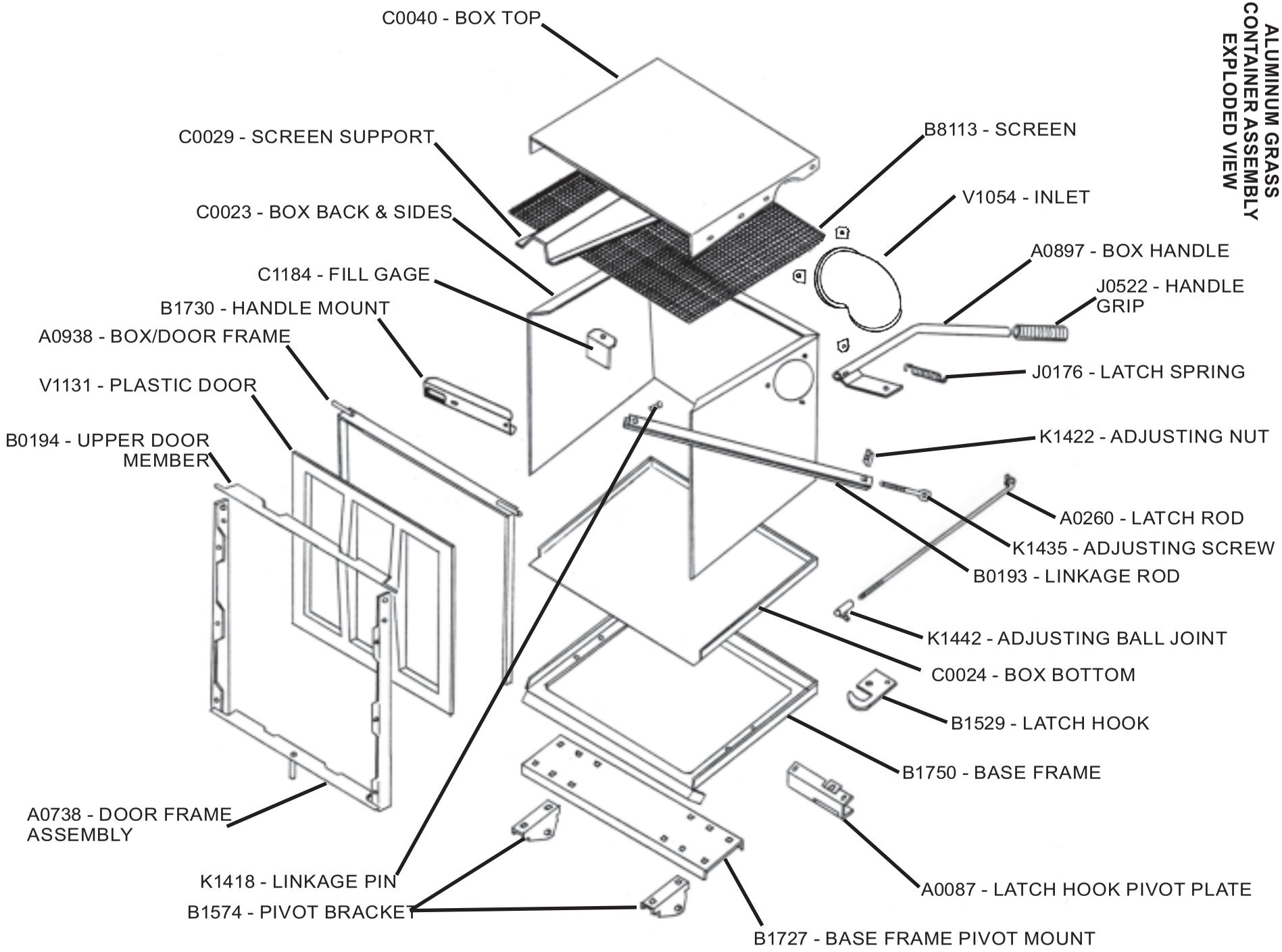

2-9 Boot To Mower Deck Installation

NOTE: Remove all grass deflector and/or mulching hardware from the mower deck before proceeding.

Position the Boot Plate P#(B0775) onto the top of the Aluminum Boot P#(E0023) as shown in Figure 2-9a. Secure the Boot Plate to the boot using (2) 3/8"-16 x 1" Carriage Bolts P#(K1182) and (2) 3/8"-16 Ny-Flange Locknuts P#(K2038). Insert the bolts from the inside of the boot so that the locks nuts are on top of the Boot Plate. This will prevent grass clipping from collecting on the bolt threads. Position the Deck Mount Plate onto the top of the mower deck as shown in Figure 2-9a. Secure the deck mount plate to the mower deck using (2) 3/8"-16 x 1" carriage bolts P#(K1182) and (2) 3/8"-16 Ny-Flange Locknuts P#(K2038). Insert the bolts from the underside of the mower deck. On 50" & 60" mowers, place (1) 3/16" wide Washers P#(K1446) on each Carriage Bolt between the Deck and the Plate.

NOTE: Do not tighten hardware until boot has been installed to mower deck.

Figure 2-9a

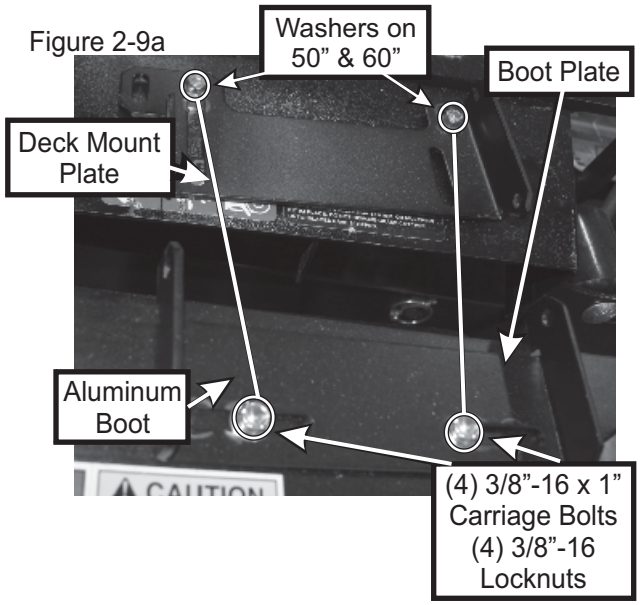

Classic Boot Plate Mounting Locations

Refer to Figure 2-9b for boot plate mounting locations.

Figure 2-9b

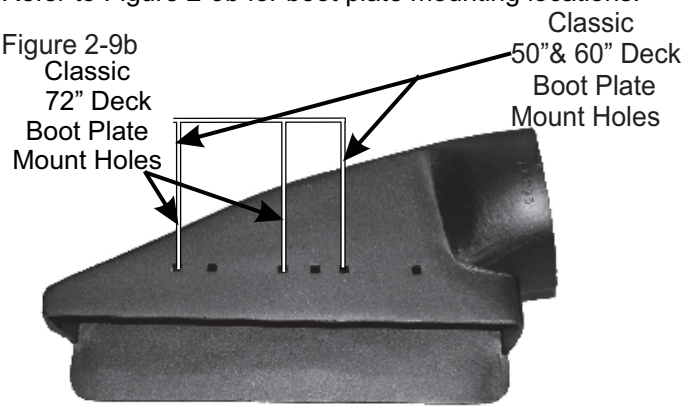

Classic Deck Plate Mounting Locations

Refer to Figure 2-9c for Classic deck plate mounting locations.

Figure 2-9c

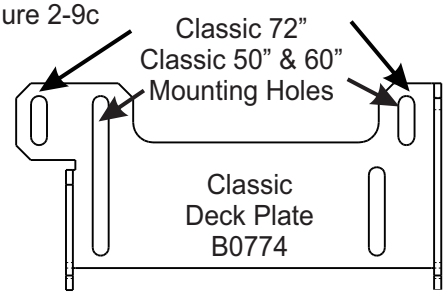

Align the holes in the Boot Plate with the holes in the Deck Mount Plate. Insert the Boot Rod P#(B0333) into the mounting holes and secure with (1) Hair Pin Clip P#(K0099). Refer to Figure 2-9d.

With all the carriage bolts still finger tight, use the slots in the deck mount plate and the boot plate to position the boot so that the front inside corner of the boot is flush to the front outside edge of the mower deck. Also check for clearance between the mowers blade and the bottom edge of the boot. Once the boot is positioned correctly, tighten all the hardware.

Figure 2-9d

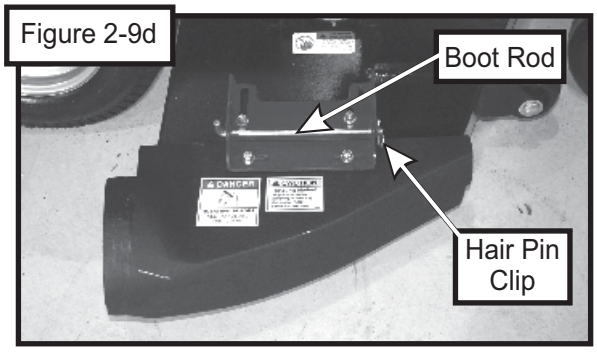

On 72" decks position and secure the Discharge Mount Plate P#(B0793) and on 60" decks Discharge Mount Plate P#(B0985) to the mower deck using (1) 3/8"-16 x 1" Carriage Bolt P#(K1182) and (1) 3/8"-16 Ny-Flange Locknut P#(K2038) as shown in Figure 2-9e.

Figure 2-9e

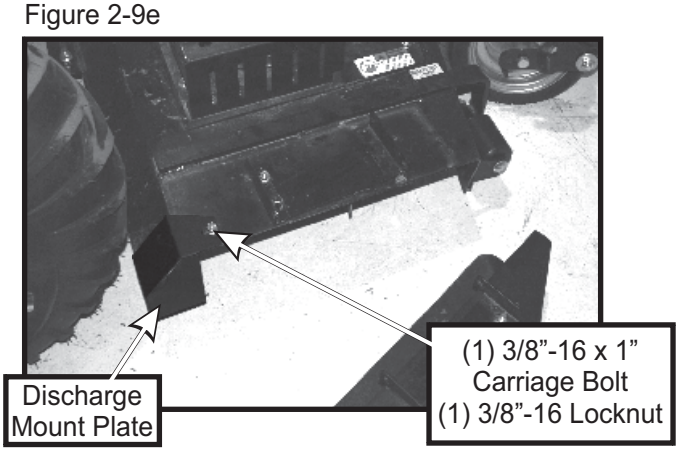

2-10 Length Of Hose Adjustment

The hoses in steps 2-11 and 2-12 must be cut to fit your machine. Follow steps 2-11 and 2-12. do not cut the hoses until you have tried to fit them on your machine. Remember that the hoses have to be long enough to adjust for the blower assembly's movement as well as allow for enough clamping surface between the inlet, blower assembly, and the deck boot.

2-11 Upper Hose Installation

Slide a Spirofil Hose Clamp P#(J0060) onto both ends of the 6" upper hose (Figure 2-11). Then slide one end of the 6" hose onto the plastic inlet P#(V1054) on the right side of the aluminum box assembly. Make sure there is about a two-inch overlap between the hose end and plastic inlet. Secure the hose ring with the locking pin. Proceed to slide the opposite end of the 6" hose onto the outlet of the blower assembly. See (Figure 2-11) for details. Make sure both ends of the hose are clearly attached to the inlet and the blower assembly inlet. Tighten the hose clamps.

2-12 Lower Hose To Blower Cone Installation

Slide a Spirofil Hose Clamp P#(J0080) over both ends of the lower hose. Then proceed to slide the lower hose onto the blower cone. Tighten the hose clamp. The assembly should look like Figure 2-11.

2-13 Lower Hose To Boot Installation

Take the unattached end of the lower hose and slide it over the circular end of the boot. Use the lower hose clamp to secure the hose to the boot (Figure 2-11). Tip: Before securing clamp rotate hose counter-clockwise (away from yourself) approximately 1" to aid in retaining boot to mower deck.

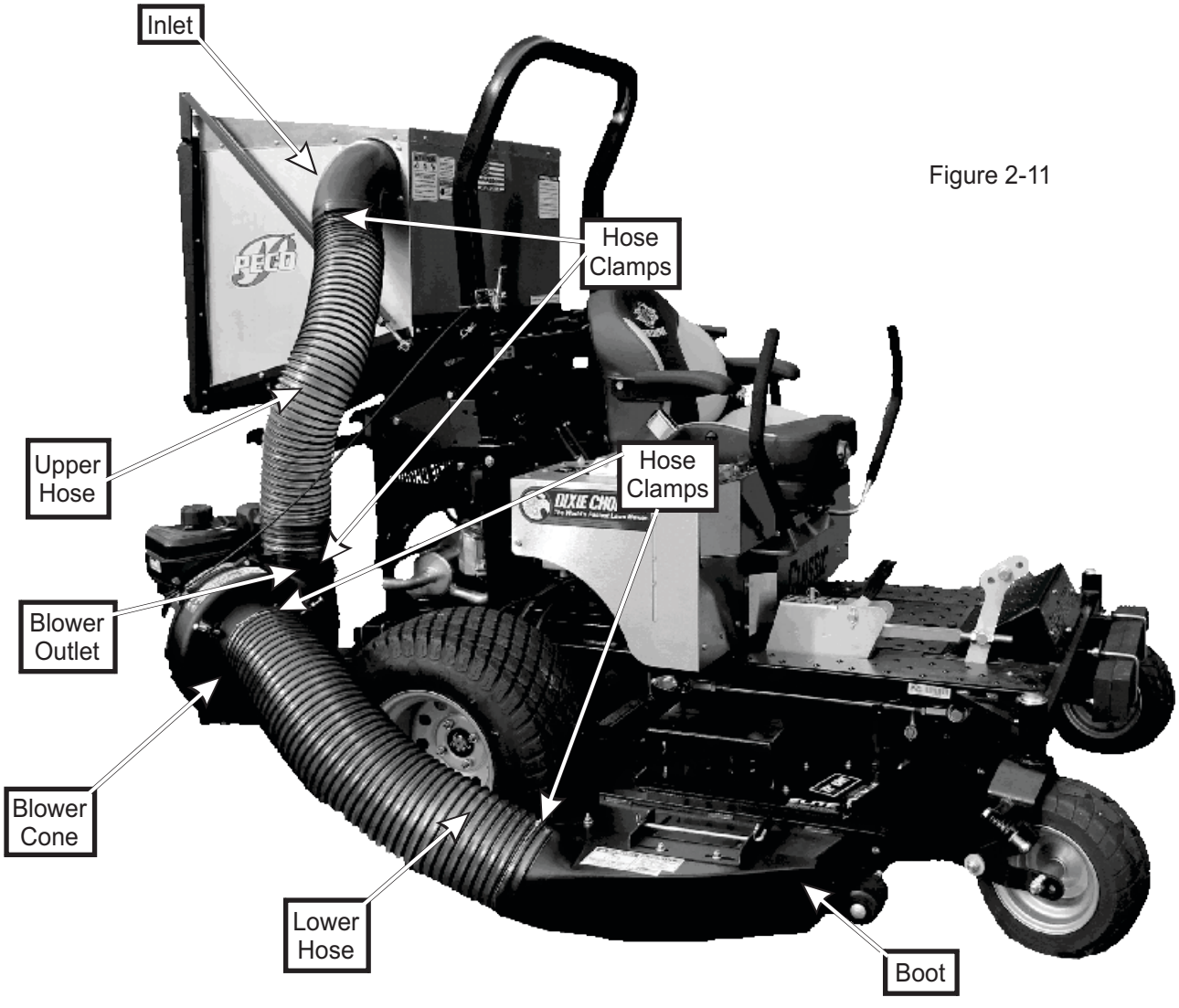

Figure 2-11

2-14 Impeller Blade Removal/Replacement

To gain impeller blade **(#1)** access, first remove the blower cone **(#2)** from the blower housing, located on the PTO assembly P#(A1821), by removing two blower cone bolts and nuts **(#3)**. Next, remove the blower housing front **(#4)** by removing seven bolts and nuts **(#5)** around the outer housing edge**.** Refer to Figure 2-14.

To Remove: First, remove one 3/8"-16 x 1-1/2" HHCS P#(K1211) **(#6)**, one taper-lock bushing washer P#(K0278) **(#7)** and one spacer bushing P#(S3242) **(#8)** from the taper-lock bushing **(#9)**. See Figure 2-14. Next, remove two 1/4"-20 x 1" HHCS **(#10)** and place them into the threaded holes **(#11)** of the taper-lock bushing P#(S4302). Last, gradually thread each bolt evenly into the taper-lock bushing, forcing the blade to break-away from the taper-lock bushing.

Tips on removing impeller blade;
1 - Try carefully hitting the base of the impeller blade **(#1)**, between each vein **(#12)**, with a rubber mallet to loosen the taper-lock bushing hold.
2 - Spray break-free lubricant into the surrounding areas of the taper-lock bushing **(#9)** and repeat Tip 1.

To Replace: First, place the impeller blade **(#1)** over the drive shaft **(#13)**. Next, slide the taper-lock bushing **(#9)** on to the drive shaft and into the impeller blade, aligning the **non-threaded** holes **(#14)** of the taper-lock bushing to the threaded holes of the impeller blade. Then, fasten by using two 1/4"-20 x 1" HHCS **(#10)**, one spacer bushing **(#8)** one taper lock bushing washer **(#7)**, and one 3/8"-16 x 1-1/2" HHCS **(#6)**. Torque all bolts to the specifications located in the chart towards the back of this manual. Last, rotate the impeller blade to ensure that the blade is clear of contact on all sides of the blower housing.

Figure 2-18

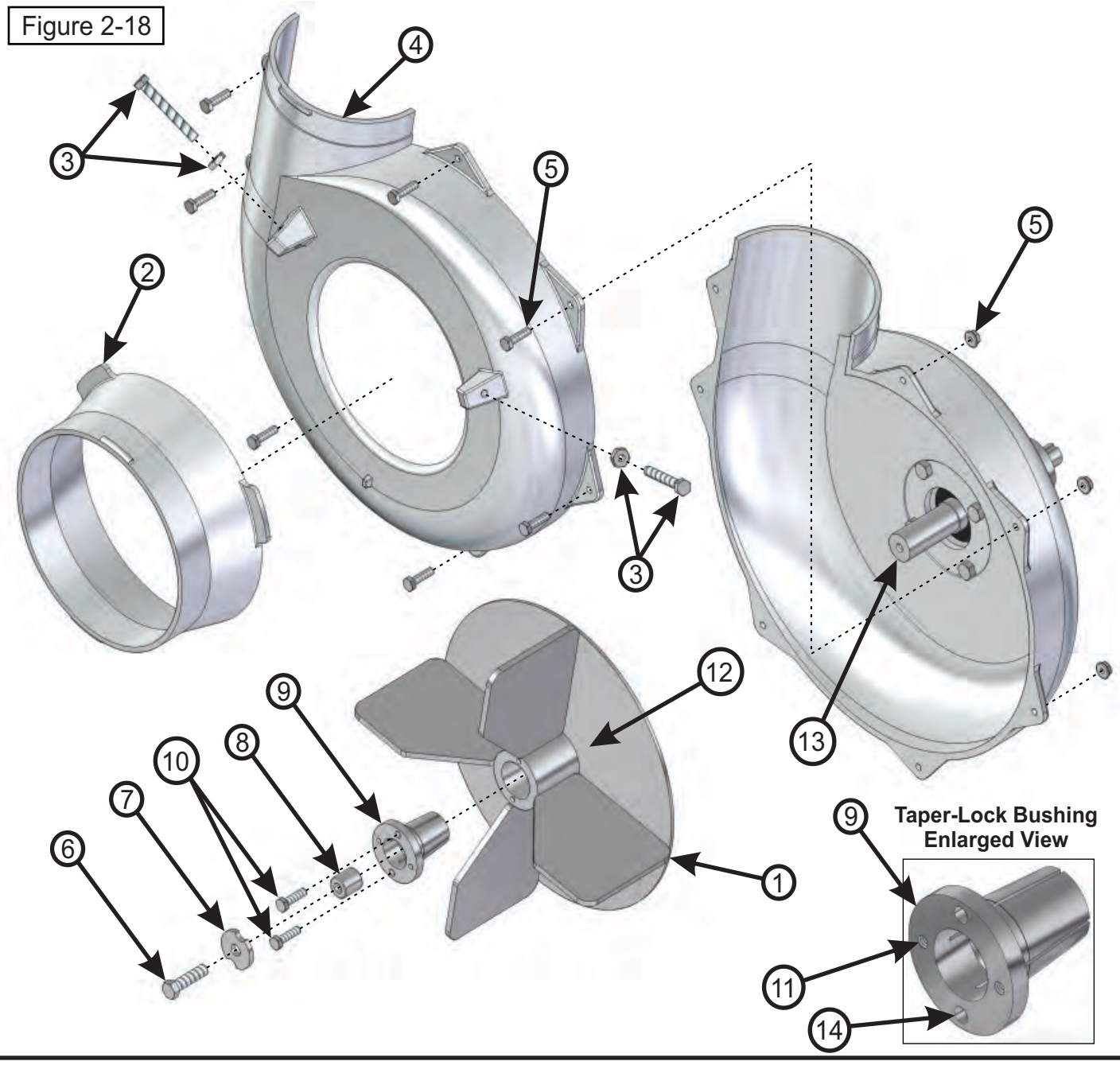

2-15 Weight Kit Installation

NOTE: It is recommended that someone assist you in the weight kit installation procedure.

For the 72” Deck - Attach the Left Weight Bracket P#(B0962) and Right Weight Bracket P#(B0963) to the front frame of the mower. Place each weight bracket onto the frame tube and secure using (1) 3/8”-16 x 2-1/4” x 1-3/4” U-Bolt P#(K1436) and (2) 3/8”-16 Ny-Flange Lock nuts P#(K2038). Leave the hardware finger tight so the position of the weight brackets can be adjusted left or right if necessary. Refer to Figure 2-15a.

For the 50” & 60” Decks - Use Left Weight Bracket P#(B0962) and Right Weight Bracket P#(B0383RT). Refer to Figure 2-15b.

Place Left Weight Bracket P#(B0962) onto the frame and secure using (1) 3/8”-16 x 2-1/4” x 1-3/4” U-Bolt P#(K1436) and (2) 3/8”-16 Ny-Flange Locknuts P#(K2038). Next, place Right Weight Bracket P#(B0383RT) onto the front tubing, as shown in Figure 2-15b and secure using (2) 3/8”-16 x 3-1/2” HHCS and (2) 3/8”-16 Ny-Flange Locknuts P#(K2038). Leave the hardware finger tight so the brackets can be adjusted left or right if necessary.

Using two people, lift the weight bars P#(B2220) into position. Secure the weight bars to the left and right weight brackets using (2) 1/2”-13 x 4-1/4” u-bolts P#(K0331) and (4) 1/2”-13 Ny-Flange locknuts P#(K2012). **NOTE:** Before tightening all of the hardware, make sure the weight bars are centered between the weight brackets.

Figure 2-15a

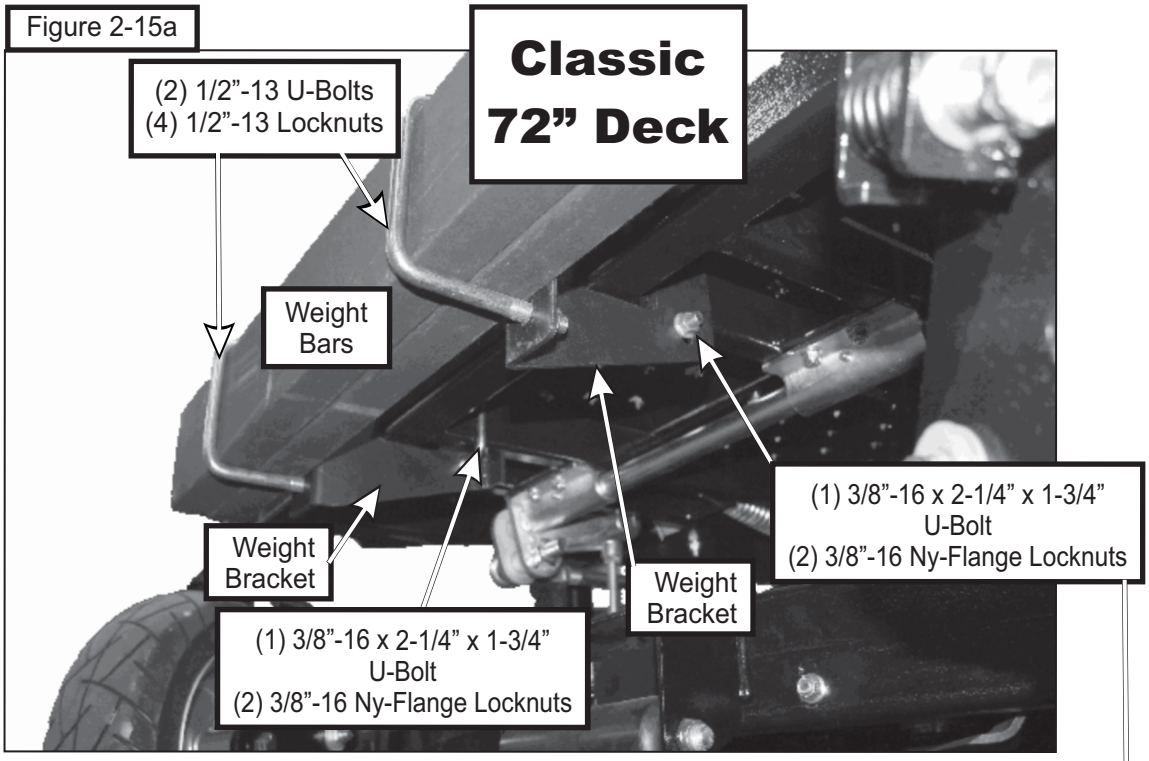

Figure 2-15b

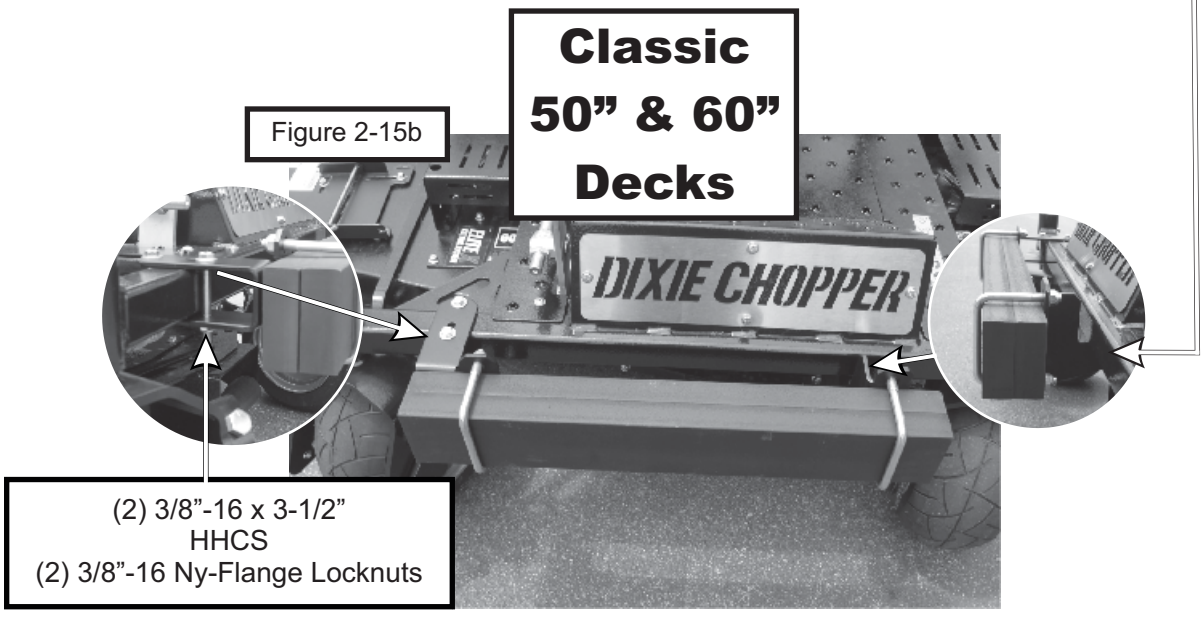

2-16 Throttle Installation

To install the throttle kit assembly to the ROPS (roll over protection system), place the 3/8" U-Bolt P#(K0136) onto the ROPS with the threads facing the front of the mower. Next slide on the throttle mount plate assembly P#(A0666) with the rivets also facing toward the front of the mower. Tighten the throttle mount plate assembly securely to the ROPS using (2) 3/8"16 Ny-Flange Locknuts P#(K2038) (Figure 2-16a). With the throttle cable facing toward the engine/blower/blade assembly, place the throttle base plate over the rivets, Slide the throttle cable kit to the right, moving the smaller end of the slot over the rivets. When positioned correctly, the throttle spring plate will snap into place (Figure 2-16b & c).

To remove the throttle cable kit, lift the throttle spring plate and slide the throttle kit to the left.

Figure 2-16a

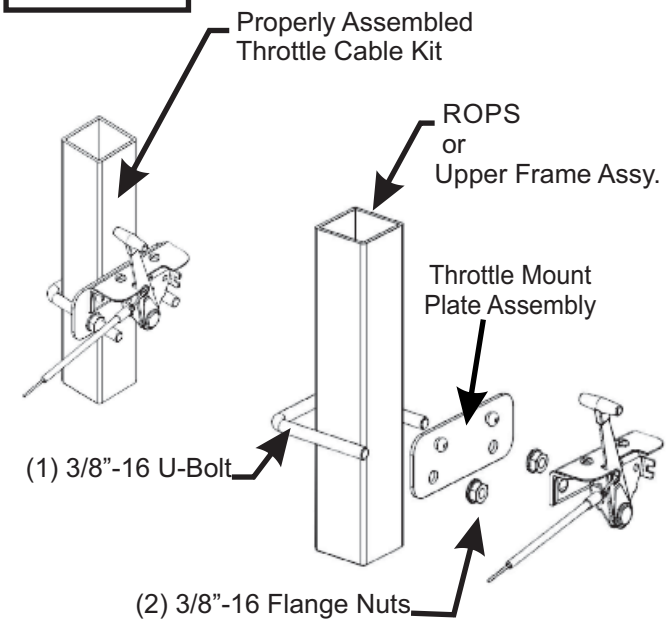

Figure 2-16b

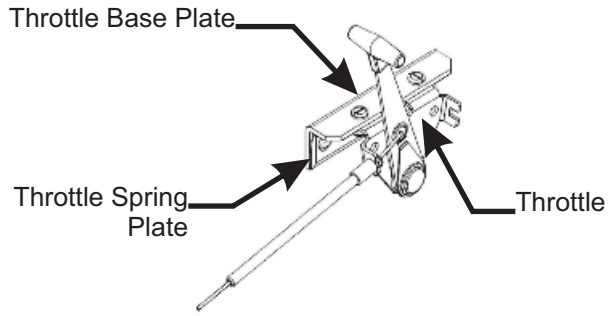

To fasten the throttle cable end to the engine, place the throttle control lever into the "slow" position. Rotate the engine throttle lever to the "slow" position. Remove screw on the engine next to the "fast" position. Attach the throttle cable sleeve clamp, oriented with bent tab up and facing the engine, using the 10-32 x 3/4" HHFS provided in the engine hardware. Insert "Z" bend into the hole on the throttle lever. Clamp the throttle cable sleeve to the engine and tighten (Figure 2-16d). Rotate the throttle control lever into the "fast" position to check for proper installation.

NOTE: Cable sleeve may need to be cut, depending on the engine type. The hole for the throttle cable may be covered by the rubber sleeve.

Figure 2-16c

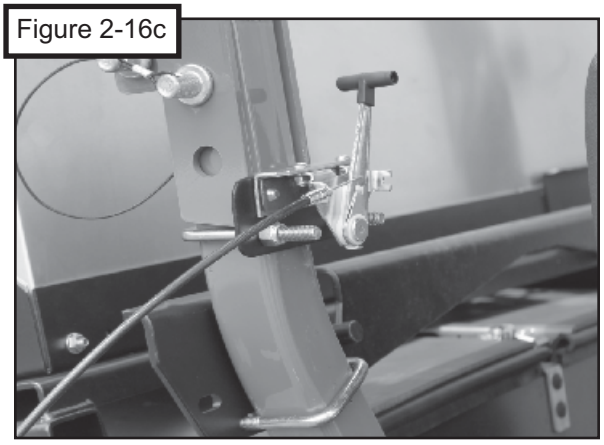

Figure 2-16d

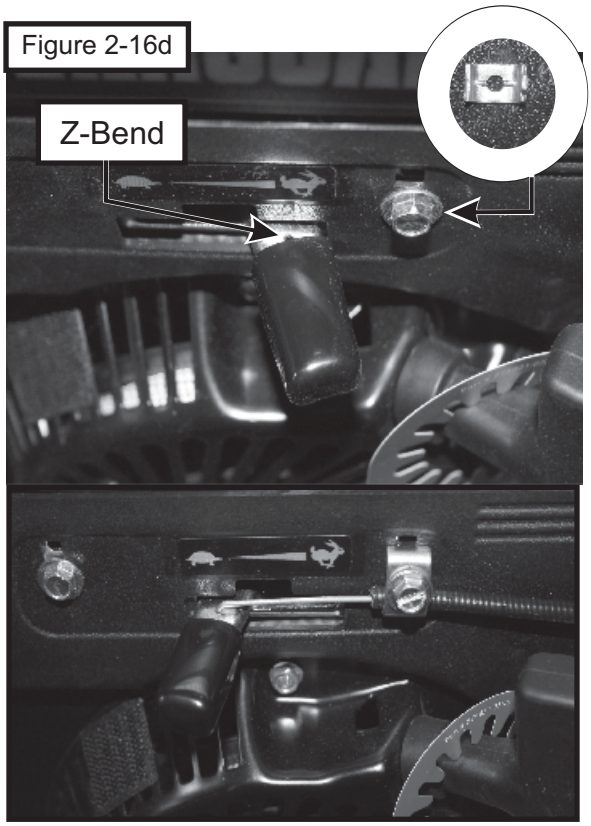

PECO Pack Drawing

Unit Model #: 38621241

Mower: Dixie Chopper	**Owner's Manual:** Q0505
Mower Type: Classic 3572HP, 3572EFI and 3672BR	**Engine Type:** KW FX35, BR VAN36 and KH EFI35
Deck Size: 72"	**Vac Type:** 12 Cu. Ft. Pro 12 DFS
Deck Type:	**Drive Type:** Briggs & Stratton 6.5HP Vanguard
Revision #:	**Fits Year(s):** 2015-2017

☐ A2054 Vac Kit

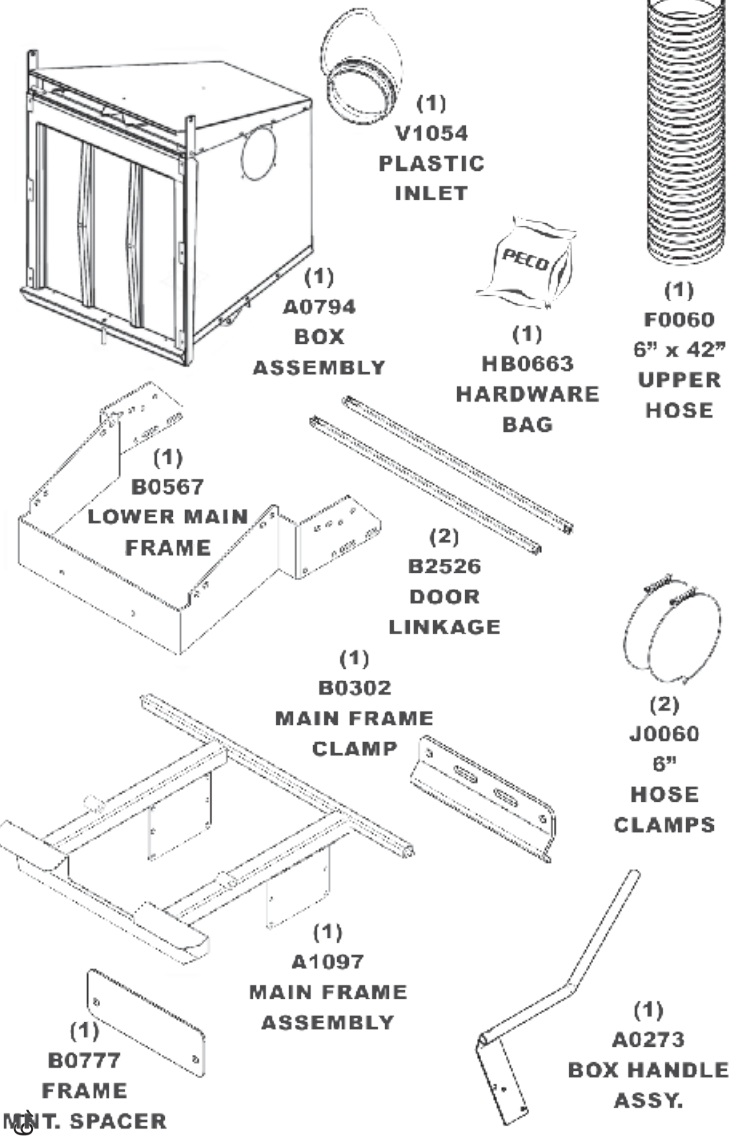

☐ A2056 Mount Kit

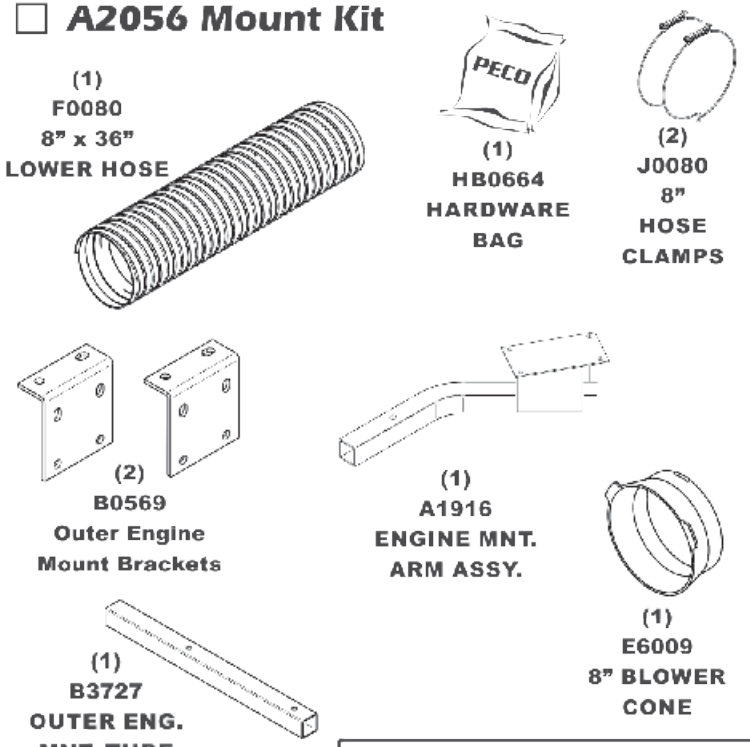

☐ A0619 Throttle Kit

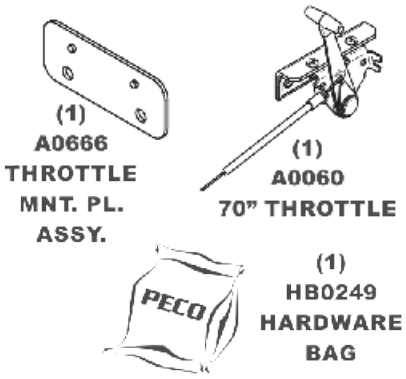

☐ A1922 Boot Kit

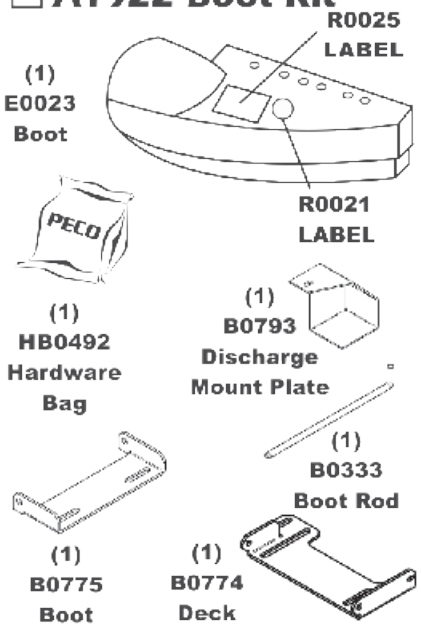

☐ A1878 Weight Kit

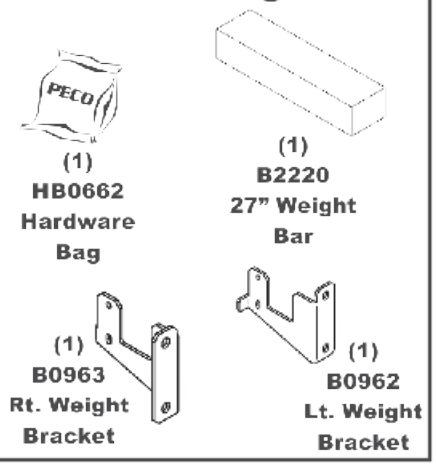

PECO Pack Drawing

Unit Model #: 38621244

Mower: Dixie Chopper	**Owner's Manual:** Q0505
Mower Type: Classic 2750KW, 2760KW, 3160HP	**Engine Type:** KW FX27, KW FX31 and KH EFI31
3160EFI	**Vac Type:** 12 Cu. Ft. Pro 12 DFS
Deck Size: 50" & 60"	**Drive Type:** Briggs & Stratton 6.5HP Vanguard
Revision #:	**Fits Year(s):** 2015-2017

☐ A2095 Vac Kit

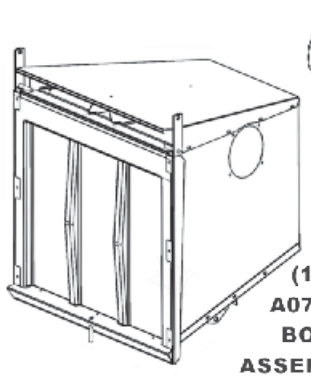

(1) A0794 BOX ASSEMBLY

(1) V1054 PLASTIC INLET

(1) HB0681 HARDWARE BAG

(1) F0060 6" x 42" UPPER HOSE

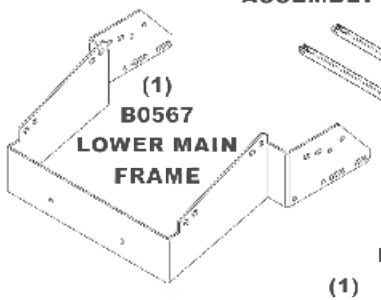

(1) B0567 LOWER MAIN FRAME

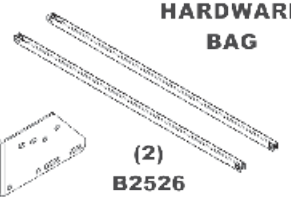

(2) B2526 DOOR LINKAGE

(2) J0060 6" HOSE CLAMPS

(1) B0302 MAIN FRAME CLAMP

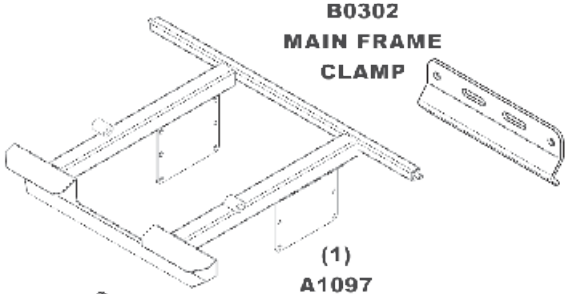

(1) A1097 MAIN FRAME ASSEMBLY

(1) B0777 FRAME MNT. SPACER

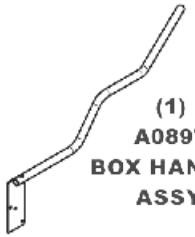

(1) A0897 BOX HANDLE ASSY.

☐ A2056 Mount Kit

(1) F0080 8" x 36" LOWER HOSE

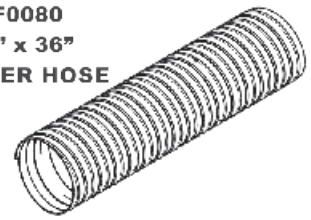

(1) HB0664 HARDWARE BAG

(2) J0080 8" HOSE CLAMPS

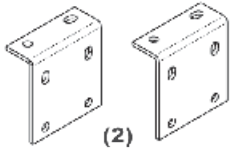

(2) B0569 Outer Engine Mount Brackets

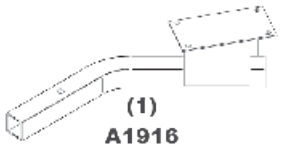

(1) A1916 ENGINE MNT. ARM ASSY.

(1) E6009 8" BLOWER CONE

(1) B3727 OUTER ENG. MNT. TUBE

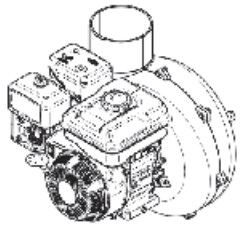

(1) A639 ENGINE/ BLOWER/ BLADE ASSY.

☐ A0619 Throttle Kit

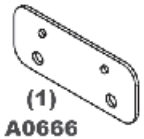

(1) A0666 THROTTLE MNT. PL. ASSY.

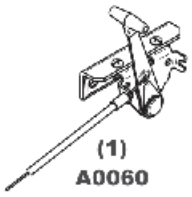

(1) A0060 70" THROTTLE

(1) HB0249 HARDWARE BAG

☐ A1880 Boot Kit

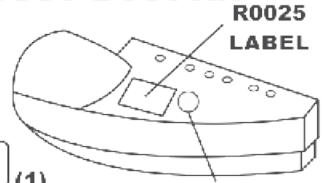

(1) E0023 BOOT

R0025 LABEL

R0021 LABEL

(1) B0985 DISCHARGE MOUNT PLATE

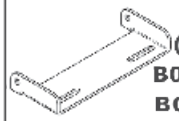

(1) B0775 BOOT PLATE

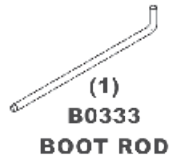

(1) B0333 BOOT ROD

(1) HB0492 HARDWARE BAG

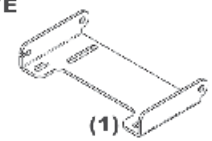

(1) B0774 DECK PLATE

☐ A2094 Weight Kit

(1) HB0680 Hardware Bag

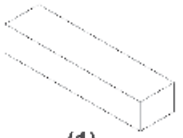

(1) B2220 27" Weight Bar

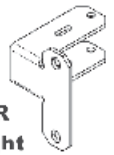

(1) B0383R Rt. Weight Bracket

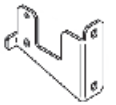

(1) B0962 Lt. Weight Bracket

SECTION III
OPERATING INSTRUCTIONS

3-1 General Safety

Only qualified people familiar with this operator's manual and the mower's operator's manual should operate this machine.

3-2 Operation And Tips On Mowing

A. Perform BEFORE EACH USE the maintenance list in paragraph 4-1.
B. Start the engine/blower/blade assembly.
C. Start the mower.
D. Engage the mower deck.

NOTE: If the collection system does not appear to be collecting the grass clippings; disengage the deck, engage the parking brake and turn the mower off, then turn off the engine/blower/blade assembly. Check the upper hose, lower hose, top screen and boot for clogs. To obtain the maximum effectiveness from your collection system the tips listed below should be followed:

* Watch your speed- Normal conditions will allow a speed of up to approximately 5 mph, but thick, heavy damp conditions will require reduced ground speed.

* Mow with sharp blades- A sharp blade cuts cleaner.

* Wet grass and leaves will decrease effectiveness and will increase horsepower requirements.

* Mow at higher cutting heights- Remove and mulch no more than 2" of grass length with each mowing. (Experts recommend not cutting off more than 1/3 of the grass blade length at any given time.)

* Mow twice, at different height settings, (high, then low), if grass is extra tall.

* Remember that horsepower requirements will vary with the mowing conditions such as type and height of turf grass, moisture content, amount of leaves, whether the terrain is flat or hilly, etc.

3-3 Disengagement Of The Blower

A. Turn the engine/blower/blade assembly off.

WARNING: The blower will continue to spin. DO NOT TOUCH the blower until the blades have come to a complete stop.

3-4 Unloading The Collection System

NOTE: Press the tab, located behind the operator's left side, downward to feel if the collection system is full. If the container is full there will be resistance when depressing the tab.

A. Stop the forward movement of the mower.
B. Disengage the mower deck.
C. Turn of the engine/blower/blade assembly.
D. Verify that the dump area is clear.
E. Push the dump handle, on the left of the operator, away from the unit. While holding the handle pushed away, move the handle upward. The container door will swing upward and the container will rotate downward. The container will release its contents.
F. Once the contents of the container have fallen out, the container is ready to move back into its normal operating position. With the handle in the 'away' position, pull the handle downward until it stops. Move the handle towards the center of the mower. This motion will allow the latch to lock back into collection position.

NOTE: If you do not hold the handle away from the mower as you pull the handle downward, the latch will not lock and the container can unexpectedly release the contents collected.

SECTION IV
MAINTENANCE

4-1 Maintenance Checklist

Before each use:

1. Check blades and spindles to be sure that no foreign objects, such as wire or steel strapping bands, are wrapped around them.

2. Inspect blades for wear. Replace if necessary. If it is necessary to sharpen the blades, remove the blades from the spindles before sharpening. DO NOT sharpen blades while still attached to the mower.

3. Make sure all shields are in place and in good condition. Repair or replace any missing or damaged shields.

4. Listen for abnormal sounds, which might indicate loose parts, damaged bearings, or other damage. Correct any deficiency before continuing operation.

5. Check for wear or deterioration of the upper or lower hoses. If there are any portions of the hose that have been torn or worn through, replace with genuine PECO parts.

After Each Use:

1. Clean all debris from machine especially from the container, underneath the belt shields, and safety decals. Replace any missing or illegible decals.

2. Inspect the unit for worn or damaged components. Repair or replace before the next use. Any replacement component installed during repair shall include the component's current safety decal specified by the manufacturers to be affixed to the component.

SECTION V
PARTS AND SERVICE

5-1 Parts And Service Information

PECO collection system owners should record the name and telephone number of their Service Center. Your Service Center will be happy to supply replacement parts, accessories, and do any service or repairs to your collection system. If for any reason your Service Center is unable to service your collection system or supply replacement parts, contact PECO and include the following information on the chart below.

DOCUMENT THE FOLLOWING INFORMATION FOR FUTURE REFERENCE

Unit Model Number:_____

Unit Engine Size:_____

Unit Serial Number:_____

Date of purchase:_____/_____/_____

Dealer/Distributor Name:_____

Address: _____ **State:**_____ **Zip:**_____

Phone Number: _____

10 WALDEN DR
ARDEN, NORTH CAROLINA 28704
(800) 438-5823 OR (828) 684-1234 FAX: (828) 684-0858
EMAIL: peco@lawnvac.com
WEBSITE: www.lawnvac.com

SAFETY DECALS

To promote safe operation, Peco supplies safety decals on all products manufactured. Damage can occur to safety decals either through shipment, use or reconditioning. Contact your local Service Center for replacement decals.

R2008

R2007

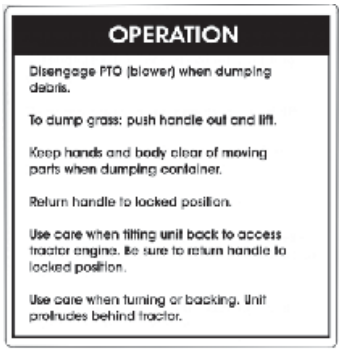

Part #: R1049

Part #: R1069

Part #: R1057

Part #: R1055

Part #: R4037

Part #: R1070

Part #: R1053

Part #: R1054

Part #: R0025

Part #:R4054

Part #:R1051

Part #:R0022

Part #:R0021

TORQUE SPECIFICATIONS

AMERICAN

Bolt Head Markings

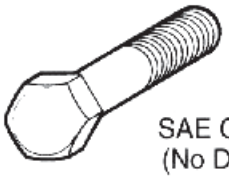

SAE Grade 2
(No Dashes)

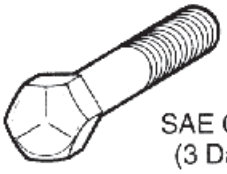

SAE Grade 5
(3 Dashes)

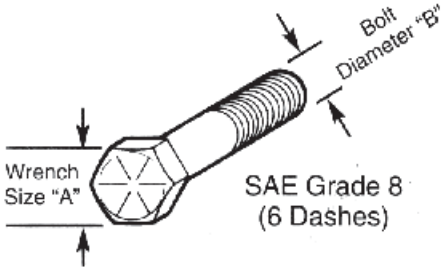

SAE Grade 8
(6 Dashes)

Proper toque for American fasteners used on Peco equipment.
Recommended Torque in Foot Pounds (Newton Meters).*

WRENCH SIZE (IN.) "A"	BOLT DIAMETER (IN.) "B" AND THREAD SIZE	SAE GRADE 2	SAE GRADE 5	SAE GRADE 8
7/16	1/4 - 20 UNC	6 (7)	8 (11)	12 (16)
7/16	1/4 - 28 UNF	6 (8)	10 (13)	14 (18)
1/2	5/16 - 18 UNC	11 (15)	17 (23)	25 (33)
1/2	5/16 - 24 UNF	13 (17)	19 (26)	27 (37)
9/16	3/8 - 16 UNC	20 (27)	31 (42)	44 (60)
9/16	3/8 - 24 UNF	23 (31)	35 (47)	49 (66)
5/8	7/16 - 14 UNC	32 (43)	49 (66)	70 (95)
5/8	7/16 - 20 UNF	36 (49)	55 (75)	78 (106)
3/4	1/2 - 13 UNC	49 (66)	76 (103)	106 (144)
3/4	1/2 - 20 UNF	55 (75)	85 (115)	120 (163)
7/8	9/16 - 12 UNC	70 (95)	109 (148)	153 (207)
7/8	9/16 - 18 UNF	79 (107)	122 (165)	172 (233)
15/16	5/8 - 11 UNC	97 (131)	150 (203)	212 (287)
15/16	5/8 - 18 UNF	110 (149)	170 (230)	240 (325)
1-1/8	3/4 - 10 UNC	144 (195)	266 (360)	376 (509)
1-1/8	3/4 - 16 UNF	192 (260)	297 (402)	420 (569)
1-5/16	7/8 - 9 UNC	166 (225)	430 (583)	606 (821)
1-5/16	7/8 - 14 UNF	184 (249)	474 (642)	668 (905)
1-1/2	1 - 8 UNC	250 (339)	644 (873)	909 (1232)
1-1/2	1 - 12 UNF	274 (371)	705 (955)	995 (1348)
1-1/2	1 - 14 UNF	280 (379)	721 (977)	1019 (1381)
1-11/16	1-1/8 - 7 UNC	354 (480)	795 (1077)	1288(1745)
1-11/16	1-1/8 - 12 UNF	397 (538)	890 (1206)	1444 (1957)
1-7/8	1-1/4 - 7 UNC	500 (678)	1120 (1518)	1817 (2462)
1-7/8	1-1/4 - 12 UNF	553 (749)	1241 (1682)	2013 (2728)
2-1/16	1-3/8 - 6 UNC	655 (887)	1470 (1992)	2382 (3228)
2-1/16	1-3/8 - 12 UNF	746 (1011)	1672 (2266)	2712 (3675)
2-1/4	1-1/2 - 6 UNC	870 (1179)	1950 (2642)	3161 (4283)
2-1/4	1-1/2 - 12 UNF	979 (1327)	2194 (2973)	3557 (4820)

METRIC

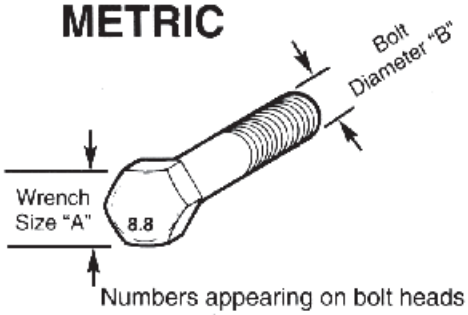

Numbers appearing on bolt heads indicate ASTM class.

*Use 75% of the specified torque value for plated fasteners. Use 85% of the specified torque values for lubricated fasteners.

Proper torque for metric fasteners used on Peco equipment.
Recommended torque in foot pounds (newton Meters).*

WRENCH SIZE (mm) "A"	BOLT DIA. (mm) "B"	ASTM 4.6	ASTM 8.8	ASTM 9.8	ASTM 10.9
8	5	1.8 (2.4)		5.1 (6.9)	6.5 (8.8)
10	6	3 (4)		8.7 (12)	11.1 (15)
13	8	7.3 (10)		21.1 (29)	27 (37)
16	10	14.5 (20)		42 (57)	53 (72)
18	12	25 (34)	74 (100)	73 (99)	93 (126)
21	14	40 (54)	118 (160)	116 (157)	148 (201)
24	16	62 (84)	167 (226)	181 (245)	230 (312)
30	20	122 (165)	325 (440)		449 (608)
33	22		443 (600)		611 (828)
36	24	211 (286)	563 (763)		778 (1054)
41	27		821 (1112)		1138 (1542)
46	30	418 (566)	1119 (1516)		1547 (2096)

NOTES:

10 WALDEN DR.
ARDEN, NORTH CAROLINA 28704
(800) 438-5823 OR (828) 684-1234 FAX: (828) 684-0858
EMAIL: peco@lawnvac.com
WEBSITE: www.lawnvac.com